EGH-2180 Saddle Assembly

Product Images

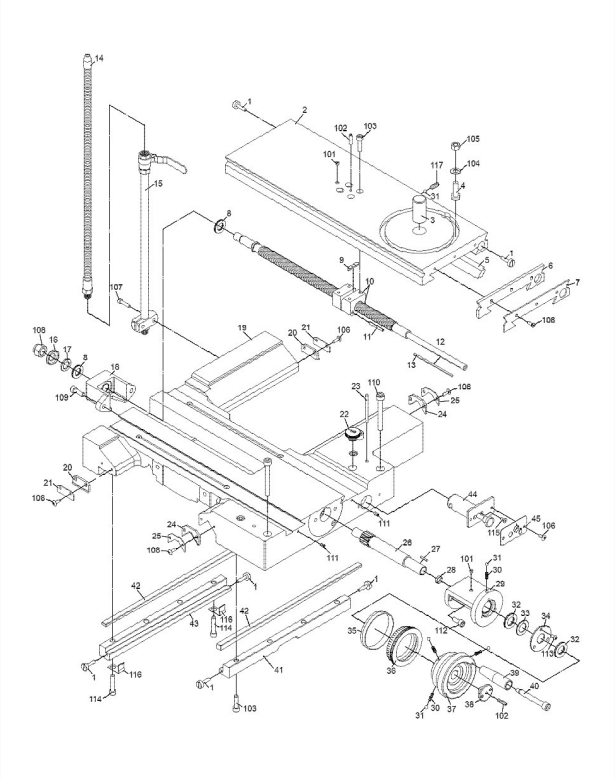

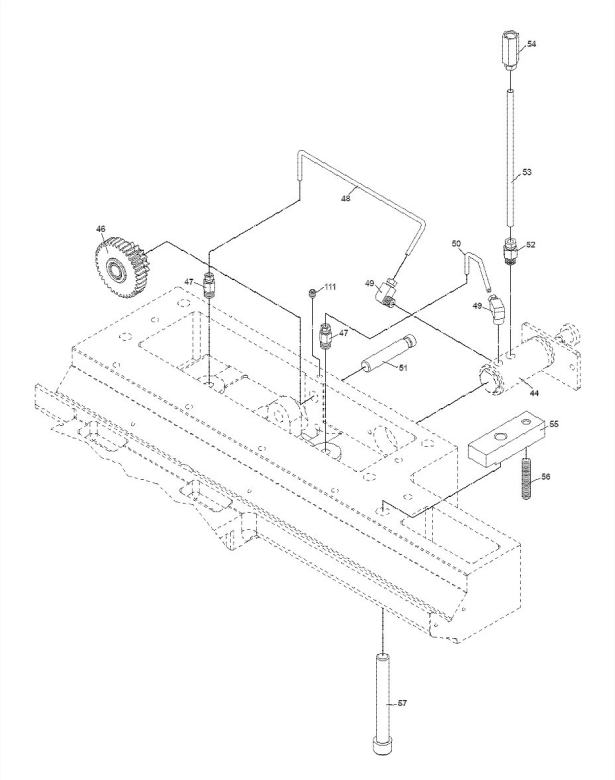

Additional Information

Stock Number	892250-7

Products in this set