EGH-21120 Saddle Assembly

Product Images

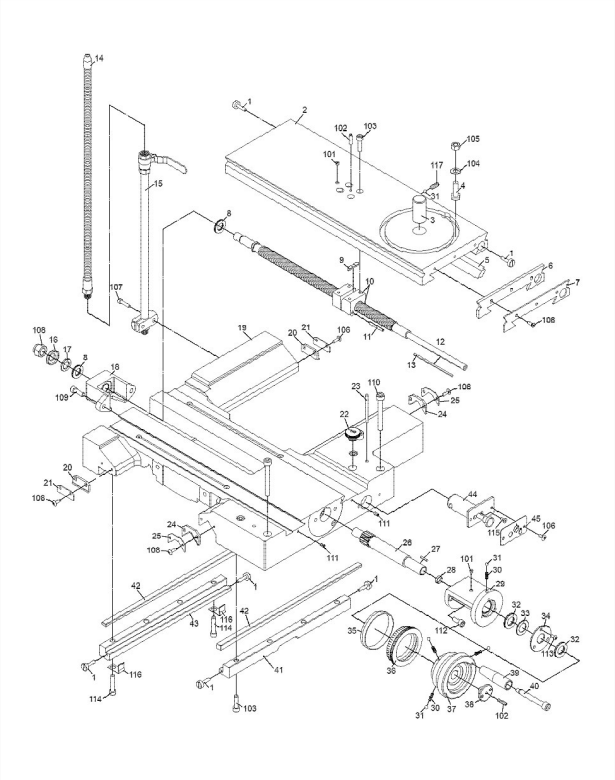

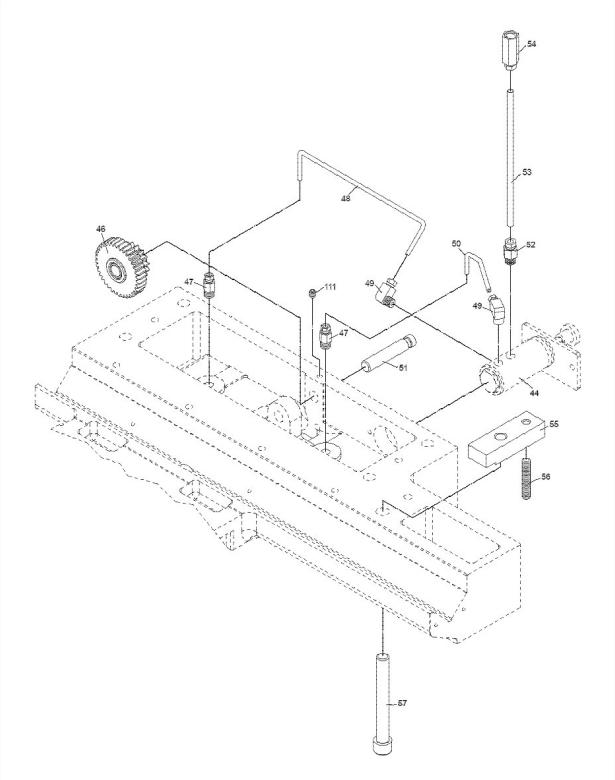

Additional Information

Stock Number	892270-7

Products in this set